Chassis Assembly / Chassis — Montage du châssis / シャーシ展開図

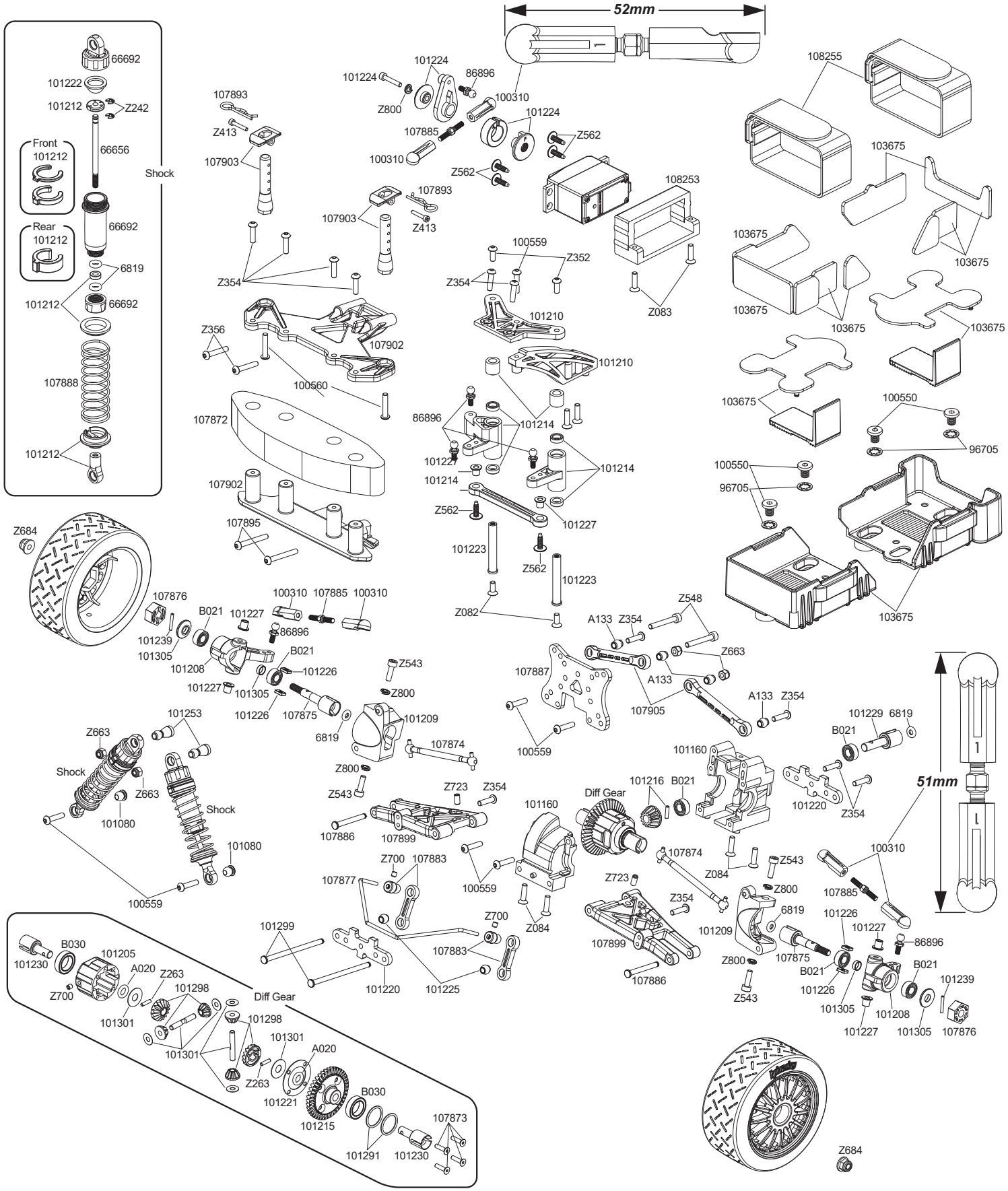

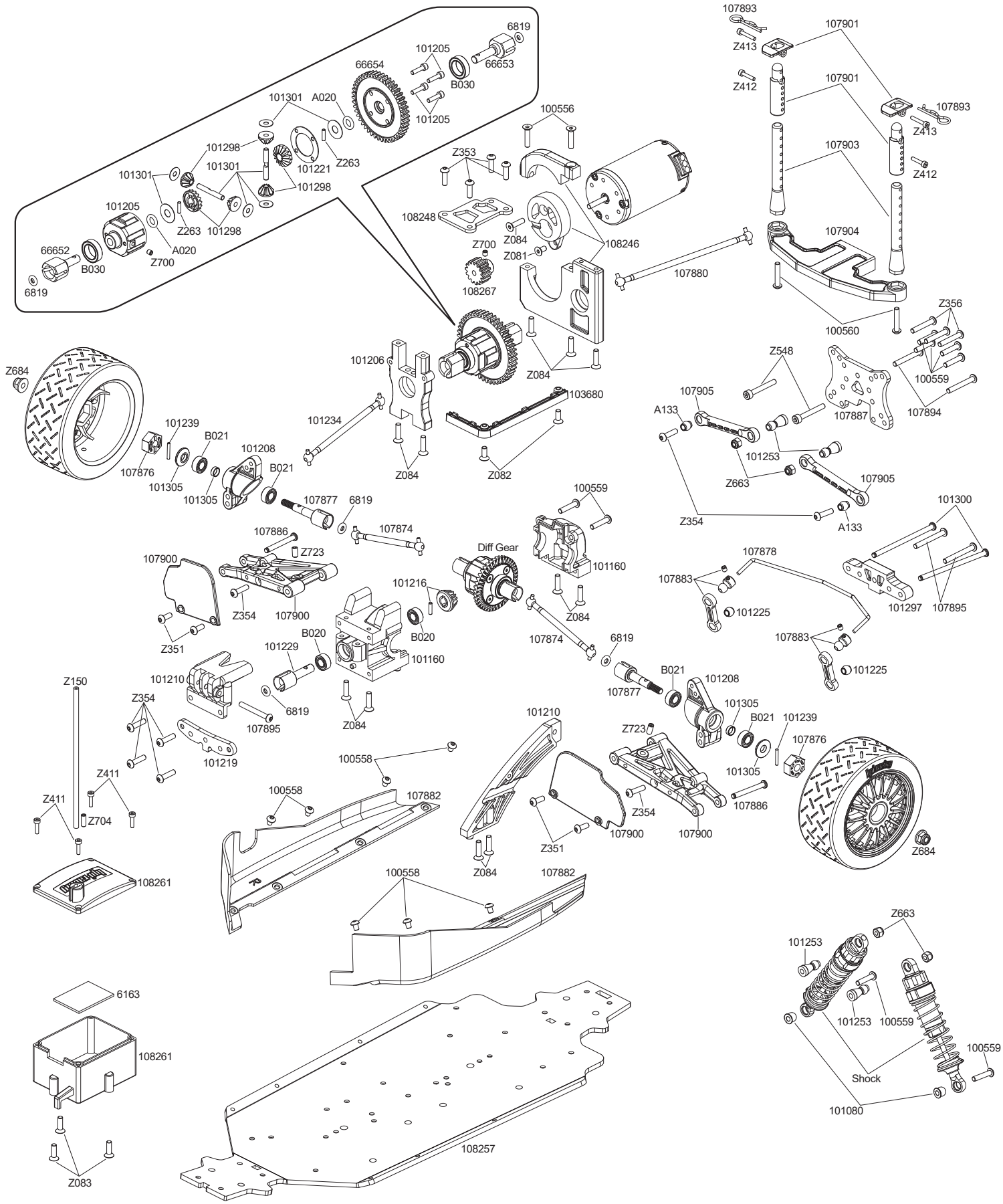

6819
101205
66654
66653
B030
101205
101301
A020
101298
101301
101221
Z263
101298
101301
101205
Z263
101298
66652
B030
A020
Z700
6819
100556
Z353
108248
Z084
Z700
Z081
108246
108267
107880
107893
Z413
107901
Z412
107901
107893
Z413
107903
Z412
107904
100560
Z356
Z548
100559
107894
107887
Z684
101206
Z084
103680
101234
101239
B021
101208
B021
107876
101305
101305
Z084
Z082
107905
A133
101253
Z663
107905
Z354
A133
107877
6819
107874
100559
101300
107886
Z723
Diff Gear
101160
107900
Z354
107900
101216
Z084
107878
107883
101225
101297
107895
Z351
B020
B020
101229
101160
107874
6819
107883
101225
Z150
101210
Z354
6819
107895
Z084
B021
101208
107877
101305
B021
101239
101210
Z723
107876
101219
100558
101305
Z411
Z411
Z704
100558
107882
Z354
107886
107900
107900
Z351
Z684
Z084
108261
100558
107882
Z663
101253
6163
101253
100559
108261
100559
Shock
101080
108257
Z083